nüvü cameras

every photon counts

nüSpace

CMOS BUILT FOR SPACE

BREAKING BARRIERS IN
LOW LIGHT
SPACE-BASED IMAGING

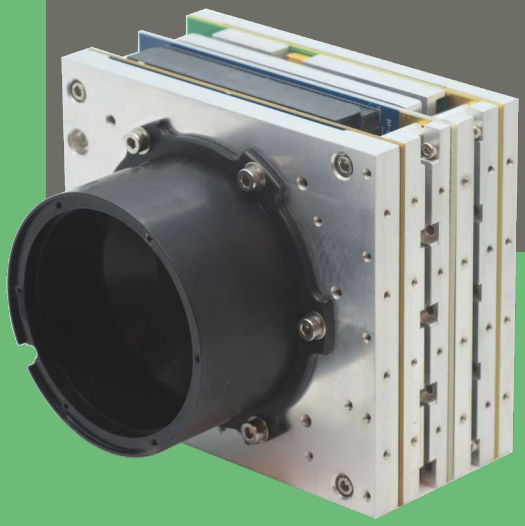

HIGH RESOLUTION AND HIGH DYNAMIC RANGE FOR VARIOUS LOW LIGHT APPLICATIONS

CUSTOMIZABLE CAMERA PLATFORM FOR CUBESATS

nüSpace CMOS

SYSTEM PARAMETERS	Size (H W D)[1]	96.00 x 96.00 x 51.45 mm Tailored to fit in 1U
	Mass[1]	< 1 kg
	Power consumption[2]	< 10 W
	Power supply	18-28V DC standard, 7-20V DC available
	Thermal interface	Side plates, contact us for more details
	Control & image interface	Camera Link, Camera Link HS, Gigabit Ethernet
	Software	Software development kit (SDK) compatible with Linux & Windows
	Imaging features	Region of Interest (ROI) Photon Counting More available on request
	Metadata	Timestamping available
ENVIRONMENTAL CONDITIONS	Thermal Vacuum Cycling (TVAC)	-45°C to 70°C and <10^{-4} Torr NASA-STD-7000B
	Random vibration	6.8 g RMS, 1 min/axis, 20-2000 Hz NASA-STD-7001B
	Radiation tolerance	>25 kRad for >5 years in LEO Contact us for MEO, GEO or other
	Operating temperatures	-35 °C to 60 °C

OUTSTANDING PERFORMANCES THANKS TO NÜVÜ'S PROPRIETARY TECHNOLOGIES

The nüSpace platform is a state-of-the-art imaging solution built to bring Nüvü's signature electronics to nanosatellites, with proven applicability to LEO, GEO and beyond.

With unmatched imaging sensitivity and flexibility with customizable detectors, optics & interfaces, the nüSpace camera platform will enable your novel space mission goals.

Potential space applications :

- Low GSD Earth observation
- Large-swath imaging
- Space surveillance (SSA)
- Sensitive UV imaging
- Extrasolar planet imaging
- High resolution spectroscopy

nüSpace CMOS

With CMOS sensors, the nüSpace camera enables high resolution, small pixel size & high sensitivity imaging in space, combined with high dynamic range and fast frame rates.

Benefit from Nüvü's extensive expertise focused on sensor control electronics for sensitive imaging applications both space and ground-based.

The nüSpace is available with multiple CMOS sensors, contact us for more specifications.

nüSpace using Fairchild Imaging's HWK4123 sensor

OPTICAL CHARACTERISTICS	Shutter type	Rolling shutter Global reset	
	Imaging area	4096 x 2300 pixels 4.6 x 4.6 µm pixel area 18.9 x 10.6 mm active area	
	Operating temperatures[3]	-35°C to 60°C	
	Frame rate[4]	120 fps	
	RMS Readout noise[5]	Down to 0.3 ē	
	Dark current[5]	0.01 ē/s @ -20°C	
	Linearity[5]	>99%	
	Dynamic range	>85 dB	
	Spectral range	300 - 1000 nm	
	Data format	12 bits	
WITH OPTICS (CUSTOMIZABLE)	Swath @ 500 km	29.5 x 16.5 km	14.7 x 8.3 km
	GSD @ 500 km	7.2 m	3.6 m
	Focal length	320 mm	630 mm
	Aperture	80.5 mm	180 mm

TYPICAL QUANTUM EFFICIENCY

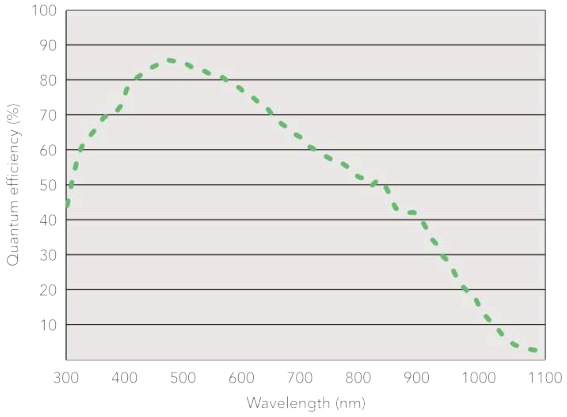

Figure 1

Typical spectral response as a function of wavelength, as specified by the detector manufacturer[6]

TECHNICAL DRAWINGS[1]

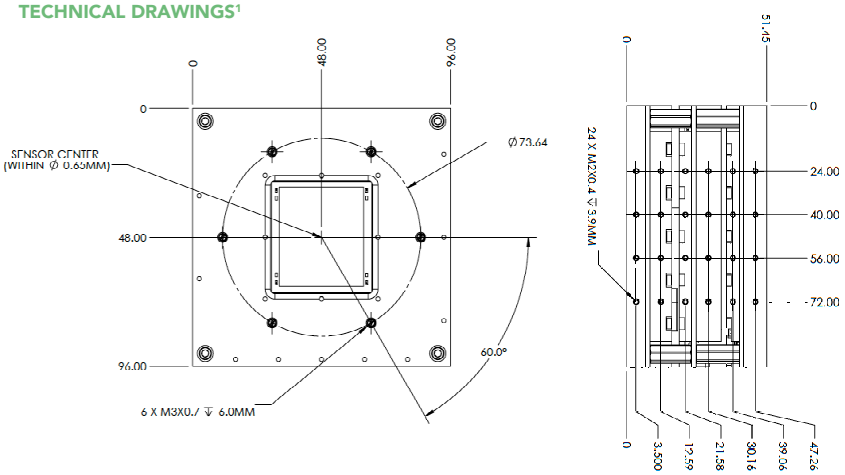

1 With standard front & back plates. Mechanical interface plates can be removed and/or modified.
2 Mean power. Measured at 1 FPS.
3 As per the CMOS detector manufacturer's data sheet. Other configurations may exist.
4 With buffering, or depending on communication mode.
5 Typical values measured at lower clock speeds. These numbers may vary depending on the CMOS detector.
6 Nüvü gives only the specifications of the CMOS detector's manufacturer (e.g. Quantum efficiency, aesthetic specifications, blemishes).

Contact us at:
sales@nuvucameras.com
+1 514 733 8666
Montreal (Quebec)
CANADA

nüvü camēras

nüSpace and nüPixel are the intellectual properties of Nüvü Camēras. All other brands are properties of their respective owners. Incremental changes are made to the products and specifications are subject to modification without prior notice.

nüSpace Specification Sheet 3.1.3

© Nüvü Camēras, 2026